Work Order ID 108792

October-29-13 10:03:29 AM

D3405-043 *108792*

B108792

Item ID: D3405-043 **Accept** *N900040100* **Setup Start** *NS1*

Revision ID: **Stop** *NS2*

Item Name: Gh0

Start Date: 11/01/13 **Start Qty:** 8.00 ~~8~~ *8* #16 *

Required Date: 11/01/13 **Req'd Qty:** 8.00 **Cust Item ID:**

Reference: **Customer:**

Run Start *NR1*

Approvals: **Process Plan:** MLS **Date:** 13-10-31 **Tooling:** **Date:** **Stop** *NR2*

QC: **Date:** **SPC (Y/N):** **Date:**

Sequence ID/ Work Center ID	Operation Description	Set Up/ Run Hours	Tool ID	Tool #	Plan Code	Accept Qty	Reject Qty	Reject Number	Insp. Stamp
Draw Nbr	**Revision Nbr**								
D3405	Rev B								
100	FLOW WATER JET	0.00							
100						16	0		Ae 13-11-30
Waterjet	**Memo**	0.00							
FLOW CNC Waterjet	1-Cut as per Dwg D3405								
304 .125"	Dwg Rev: B								
	Prog Rev: B								
	2-Deburr if necessary								
110	QC2- Inspect parts off machine FAI/FAIB	0.00							
110						16	0		Ae 13-11-30
QC	**Memo**	0.00							
Quality Control									
120	QC8- Inspect parts - second check	0.00 DAS 27 9-89							
120						16			
QC	**Memo**	0.00 13/12/02							
Quality Control									

DQA: _____ Date: _____

WORK ORDER NON-CONFORMANCE / UPDATE

DART AEROSPACE

QA Closed: Date: Work Order update only ☐

Work Order: _____

Part No. _____

NCR No. _____

DISPOSITION

Rework ☐
Scrap ☐
Use-as-is ☐
Suspected Unapproved ☐

AGAINST DEPARTMENT/PROCESS

Skid-tube ☐ Crosstube ☐ Water Jet ☐ Engineering ☐
Machining ☐ Small Fab ☐ Prod. Eng. Coor. ☐ Quality ☐
Thermoforming ☐ Finishing ☐ Rec/Store/Packaging ☐ Other ☐
Large Fab ☐ Composite ☐ Supplier ☐ ☐

Root Cause		Date	Step	Qty	Description of work order update or non-conformance	Initial Chief Eng	Action Description	Sign & Date	Verification	QC Inspector
Design	☐									
Doc/Data	☐									
Equip/Tooling	☐									
Handling/Pre	☐									
Material	☐									
Operator	☐									
Offset/Setup	☐									
Process	☐									
Supplier	☐									
Training	☐									
Transport	☐									
Unapproved	☐									

FAULT CATEGORY

Landing Gear

☐ Bending
☐ Centre Not Concentric
☐ Cracks
☐ Crimp/Kink/Ripple/Wave
☐ Cuffs
☐ Crushing
☐ Heat Treat
☐ Inspection Strip in Tube
☐ Marks/Chatter
☐ Turning Sequence
☐ Wave/Twist in Tube

General

☐ Bend
☐ BOM/Route
☐ Broken/Damage/Defect
☐ Burrs
☐ Contamination
☐ Countersink
☐ Cut Too Short
☐ Drawing
☐ Drill Holes
☐ Finish
☐ Fit/Function
☐ Folio/Program
☐ Grain
☐ Hardware
☐ Inspection Incomplete/Unqualified
☐ Instructions Incomplete/Unclear
☐ Misaligned/off center
☐ Mislabeled
☐ Misread
☐ Off-set
☐ Out of Calibration
☐ Out of Sequence
☐ Outside Dimensions
☐ Over/Under tolerance
☐ Part Incorrect
☐ Part Lost/Missing
☐ Part Moved
☐ Positioned Wrong
☐ Power Loss/Surge
☐ Pressure/Forced
☐ Set-up
☐ Temperature/Cure
☐ Weld
☐ Wrong Stock Pulled
☐ Other

_____
_____
_____

Work Order ID 108792

108792

October-29-13 10:03:29 AM

Item ID: D3405-043 **Accept** *N9000040100* **Setup Start** *NS1*

Revision ID: **Stop** *NS2*

Item Name: Gh0

Start Date: 11/01/13 **Start Qty:** 8.00 *8*

Required Date: 11/01/13 **Req'd Qty:** 8.00 *8*

Cust Item ID:

Customer:

Reference:

Run Start *NR1*

Stop *NR2*

Approvals: **Process Plan:** _____ **Date:** _____ **Tooling:** _____ **Date:** _____

QC: _____ **Date:** _____ **SPC (Y/N):** _____ **Date:** _____

Sequence ID/ Work Center ID	Operation Description	Set Up/ Run Hours	Tool ID	Tool #	Plan Code	Accept Qty	Reject Qty	Reject Number	Insp. Stamp
130		0.00							13/12/03
130	NC BRAKE			DAS 30 9-89		16			
Brake NC	**Memo**	0.00							
Brake NC	1-Deburr 2-Form using DT8204 as per Dwg D3405 3- use DT9681 to check if correct forming								
				DAS 27 9-89					
140	QC5- Inspect part completeness to step on W/O	0.00							
140				13/12/03		16			
QC	**Memo**	0.00							
Quality Control									
150	Weld per dwg A/R S.S. rod Batch: m126048	0.00							
150	Large Fab					(+16)		mr	13.12.16
Large Fab	**Memo**	0.00							
Large Fab	Weld as per Dwg D3405 use DT8484 Identify as D3405-043								

DQA: _____ Date: _____

WORK ORDER NON-CONFORMANCE / UPDATE

QA Closed: Date:

Work Order update only ☐

Work Order: _____

Part No. _____

NCR No. _____

DISPOSITION

Rework ☐
Scrap ☐
Use-as-is ☐
Suspected Unapproved ☐

AGAINST DEPARTMENT/PROCESS

Skid-tube ☐ Crosstube ☐ Water Jet ☐ Engineering ☐
Machining ☐ Small Fab ☐ Prod. Eng. Coor. ☐ Quality ☐
Thermoforming ☐ Finishing ☐ Rec/Store/Packaging ☐ Other ☐
Large Fab ☐ Composite ☐ Supplier ☐ ☐

Root Cause		Date	Step	Qty	Description of work order update or non-conformance	Initial Chief Eng	Action Description	Sign & Date	Verification	QC Inspector
Design	☐									
Doc/Data	☐									
Equip/Tooling	☐									
Handling/Pre	☐									
Material	☐									
Operator	☐									
Offset/Setup	☐									
Process	☐									
Supplier	☐									
Training	☐									
Transport	☐									
Unapproved	☐									

FAULT CATEGORY

Landing Gear

☐ Bending
☐ Centre Not Concentric
☐ Cracks
☐ Crimp/Kink/Ripple/Wave
☐ Cuffs
☐ Crushing
☐ Heat Treat
☐ Inspection Strip in Tube
☐ Marks/Chatter
☐ Turning Sequence
☐ Wave/Twist in Tube

General

☐ Bend
☐ BOM/Route
☐ Broken/Damage/Defect
☐ Burrs
☐ Contamination
☐ Countersink
☐ Cut Too Short
☐ Drawing
☐ Drill Holes
☐ Finish
☐ Fit/Function
☐ Folio/Program
☐ Grain
☐ Hardware
☐ Inspection Incomplete/Unqualified
☐ Instructions Incomplete/Unclear
☐ Misaligned/off center
☐ Mislabeled
☐ Misread
☐ Off-set
☐ Out of Calibration
☐ Out of Sequence
☐ Outside Dimensions
☐ Over/Under tolerance
☐ Part Incorrect
☐ Part Lost/Missing
☐ Part Moved
☐ Positioned Wrong
☐ Power Loss/Surge
☐ Pressure/Forced
☐ Set-up
☐ Temperature/Cure
☐ Weld
☐ Wrong Stock Pulled
☐ Other

_____
_____
_____

Work Order ID 108792

108792

October-29-13 10:03:29 AM

Item ID: D3405-043 **Accept** *N900040100* **Setup Start** *NS1*
Revision ID: **Stop** *NS2*
Item Name: Gh0

Start Date: 11/01/13 **Start Qty:** 8.00 *8*
Required Date: 11/01/13 **Req'd Qty:** 8.00 *8*
Reference:

Cust Item ID:
Customer:

Run Start *NR1*
Stop *NR2*

Approvals: **Process Plan:** _____ **Date:** _____ **Tooling:** _____ **Date:** _____
QC: _____ **Date:** _____ **SPC (Y/N):** _____ **Date:** _____

Sequence ID/ Work Center ID	Operation Description	Set Up/ Run Hours	Tool ID	Tool #	Plan Code	Accept Qty	Reject Qty	Reject Number	Insp. Stamp
160	QC9- Inspect visual per QSI004- Fusion Welds	0.00							
160						(16)	13-12-16		DAS 09
QC	**Memo**	0.00							
Quality Control									
170	QC5- Inspect part completeness to step on W/O	0.00							
170						(16)	13-12-16		DAS 09
QC	**Memo**	0.00							
Quality Control									
180	White Gloss(Ref:4.3.5.1) per QSI005 4.3-Alum M176829.	0.00							
180						16.	13-12-18.		DAS 34 9-89
Powdercoat	**Memo**	0.00							
Powder Coating	START TIME: 8:05 OVEN TEMPERATURE: 400° FINISH TIME: 8:35								

DQA: _____ Date: _____

DART AEROSPACE

WORK ORDER NON-CONFORMANCE / UPDATE

QA Closed: Date: Work Order update only ☐

Work Order: _____

Part No. _____

NCR No. _____

DISPOSITION

Rework ☐
Scrap ☐
Use-as-is ☐
Suspected Unapproved ☐

AGAINST DEPARTMENT/PROCESS

Skid-tube ☐ Crosstube ☐ Water Jet ☐ Engineering ☐
Machining ☐ Small Fab ☐ Prod. Eng. Coor. ☐ Quality ☐
Thermoforming ☐ Finishing ☐ Rec/Store/Packaging ☐ Other ☐
Large Fab ☐ Composite ☐ Supplier ☐

Root Cause		Date	Step	Qty	Description of work order update or non-conformance	Initial Chief Eng	Action Description	Sign & Date	Verification	QC Inspector
Design	☐									
Doc/Data	☐									
Equip/Tooling	☐									
Handling/Pre	☐									
Material	☐									
Operator	☐									
Offset/Setup	☐									
Process	☐									
Supplier	☐									
Training	☐									
Transport	☐									
Unapproved	☐									

FAULT CATEGORY

Landing Gear

☐ Bending
☐ Centre Not Concentric
☐ Cracks
☐ Crimp/Kink/Ripple/Wave
☐ Cuffs
☐ Crushing
☐ Heat Treat
☐ Inspection Strip in Tube
☐ Marks/Chatter
☐ Turning Sequence
☐ Wave/Twist in Tube

General

☐ Bend
☐ BOM/Route
☐ Broken/Damage/Defect
☐ Burrs
☐ Contamination
☐ Countersink
☐ Cut Too Short
☐ Drawing
☐ Drill Holes
☐ Finish
☐ Fit/Function
☐ Folio/Program
☐ Grain
☐ Hardware
☐ Inspection Incomplete/Unqualified
☐ Instructions Incomplete/Unclear
☐ Misaligned/off center
☐ Mislabeled
☐ Misread
☐ Off-set
☐ Out of Calibration
☐ Out of Sequence
☐ Outside Dimensions
☐ Over/Under tolerance
☐ Part Incorrect
☐ Part Lost/Missing
☐ Part Moved
☐ Positioned Wrong
☐ Power Loss/Surge
☐ Pressure/Forced
☐ Set-up
☐ Temperature/Cure
☐ Weld
☐ Wrong Stock Pulled
☐ Other

_____
_____
_____

Work Order ID 108792

October-29-13 10:03:29 AM

108792

Item ID: D3405-043 **Accept** *N900040100* **Setup Start** *NS1*
Revision ID: **Stop** *NS2*
Item Name: Gh0
Start Date: 11/01/13 **Start Qty:** 8.00 *8*
Required Date: 11/01/13 **Req'd Qty:** 8.00 *8*
Reference:
Cust Item ID:
Customer:

Approvals: **Process Plan:** _____ **Date:** _____ **Tooling:** _____ **Date:** _____
QC: _____ **Date:** _____ **SPC (Y/N):** _____ **Date:** _____

Run Start *NR1*
Stop *NR2*

Sequence ID/ Work Center ID	Operation Description	Set Up/ Run Hours	Tool ID	Tool #	Plan Code	Accept Qty	Reject Qty	Reject Number	Insp. Stamp
190 *190* QC Quality Control	QC3- Inspect Part Finish	0.00				16			DAS 27 9-89
	Memo	0.00							
200 *200* Packaging Packaging	Identify as per dwg & Stock Location: ST 468	0.00				16x			DAS 26 9-89
	Memo	0.00							
210 *210* QC Quality Control	QC21- Final Inspection - Work Order Release	0.00							
	Memo	0.00							

13/12/18

13-12-19

13/12/30

13-12-20

DQA: _____ Date: _____

WORK ORDER NON-CONFORMANCE / UPDATE

DART AEROSPACE

QA Closed: Date: Work Order update only ☐

Work Order: _____

Part No. _____

NCR No. _____

DISPOSITION

Rework ☐
Scrap ☐
Use-as-is ☐
Suspected Unapproved ☐

AGAINST DEPARTMENT/PROCESS

Skid-tube ☐ Crosstube ☐ Water Jet ☐ Engineering ☐
Machining ☐ Small Fab ☐ Prod. Eng. Coor. ☐ Quality ☐
Thermoforming ☐ Finishing ☐ Rec/Store/Packaging ☐ Other ☐
Large Fab ☐ Composite ☐ Supplier ☐ ☐

Root Cause		Date	Step	Qty	Description of work order update or non-conformance	Initial Chief Eng	Action Description	Sign & Date	Verification	QC Inspector
Design	☐									
Doc/Data	☐									
Equip/Tooling	☐									
Handling/Pre	☐									
Material	☐									
Operator	☐									
Offset/Setup	☐									
Process	☐									
Supplier	☐									
Training	☐									
Transport	☐									
Unapproved	☐									

FAULT CATEGORY

Landing Gear

☐ Bending
☐ Centre Not Concentric
☐ Cracks
☐ Crimp/Kink/Ripple/Wave
☐ Cuffs
☐ Crushing
☐ Heat Treat
☐ Inspection Strip in Tube
☐ Marks/Chatter
☐ Turning Sequence
☐ Wave/Twist in Tube

General

☐ Bend
☐ BOM/Route
☐ Broken/Damage/Defect
☐ Burrs
☐ Contamination
☐ Countersink
☐ Cut Too Short
☐ Drawing
☐ Drill Holes
☐ Finish
☐ Fit/Function
☐ Folio/Program
☐ Grain
☐ Hardware
☐ Inspection Incomplete/Unqualified
☐ Instructions Incomplete/Unclear
☐ Misaligned/off center
☐ Mislabeled
☐ Misread
☐ Off-set
☐ Out of Calibration
☐ Out of Sequence
☐ Outside Dimensions
☐ Over/Under tolerance
☐ Part Incorrect
☐ Part Lost/Missing
☐ Part Moved
☐ Positioned Wrong
☐ Power Loss/Surge
☐ Pressure/Forced
☐ Set-up
☐ Temperature/Cure
☐ Weld
☐ Wrong Stock Pulled
☐ Other

_____
_____
_____

Picklist Print

October-29-13 10:03:28 AM

Work Order ID: 108792

Parent Item: D3405-043

Parent Item Name: Gh0

Start Date: 11/01/13 **Required Date:** 11/01/13

Start Qty: 8.00 **Required Qty:** 8.00

Comments: IPP A05.09.01New issueKJ/JLM
IPP B 09.01.28 Rev b dwg EC verified by: DD

Component Item ID/ Item Name	Replacement Item ID	Mfg/ Purch	Bin Item	Primary Location	Last Location	Route Seq ID	Unit of Measure	Qty on Hand	Qty per Kit	Total Qty	Qty Issued	Date Issued	Status
D3404-1 GHW/ Lug		Manufactured	No			100	Each	19.0000	1	16 ~~8~~		13.12.11	
B 108099 +													
				Location		**Loc Qty**		**Loc Code**					
				WA001		19							
					106247	19							
M304S11GA 304/316 0.125 Sheet		Purchased	No			150	sf	207.0633	0.154	~~1.2968424~~		13.11.30	
				Location		**Loc Qty**		**Loc Code**					
				MAT020		207.0632632							
					122521	19.1432632							
					124445	43.5							
					M126075	144.42				126075 → 2.6			

DQA: _____ Date: _____

WORK ORDER NON-CONFORMANCE / UPDATE

DART AEROSPACE

QA Closed: Date: Work Order update only ☐

Work Order: _____

Part No. _____

NCR No. _____

DISPOSITION

Rework ☐
Scrap ☐
Use-as-is ☐
Suspected Unapproved ☐

AGAINST DEPARTMENT/PROCESS

Skid-tube ☐ Crosstube ☐ Water Jet ☐ Engineering ☐
Machining ☐ Small Fab ☐ Prod. Eng. Coor. ☐ Quality ☐
Thermoforming ☐ Finishing ☐ Rec/Store/Packaging ☐ Other ☐
Large Fab ☐ Composite ☐ Supplier ☐

Root Cause		Date	Step	Qty	Description of work order update or non-conformance	Initial Chief Eng	Action Description	Sign & Date	Verification	QC Inspector
Design	☐									
Doc/Data	☐									
Equip/Tooling	☐									
Handling/Pre	☐									
Material	☐									
Operator	☐									
Offset/Setup	☐									
Process	☐									
Supplier	☐									
Training	☐									
Transport	☐									
Unapproved	☐									

FAULT CATEGORY

Landing Gear

☐ Bending
☐ Centre Not Concentric
☐ Cracks
☐ Crimp/Kink/Ripple/Wave
☐ Cuffs
☐ Crushing
☐ Heat Treat
☐ Inspection Strip in Tube
☐ Marks/Chatter
☐ Turning Sequence
☐ Wave/Twist in Tube

General

☐ Bend
☐ BOM/Route
☐ Broken/Damage/Defect
☐ Burrs
☐ Contamination
☐ Countersink
☐ Cut Too Short
☐ Drawing
☐ Drill Holes
☐ Finish
☐ Fit/Function
☐ Folio/Program
☐ Grain
☐ Hardware
☐ Inspection Incomplete/Unqualified
☐ Instructions Incomplete/Unclear
☐ Misaligned/off center
☐ Mislabeled
☐ Misread
☐ Off-set
☐ Out of Calibration
☐ Out of Sequence
☐ Outside Dimensions
☐ Over/Under tolerance
☐ Part Incorrect
☐ Part Lost/Missing
☐ Part Moved
☐ Positioned Wrong
☐ Power Loss/Surge
☐ Pressure/Forced
☐ Set-up
☐ Temperature/Cure
☐ Weld
☐ Wrong Stock Pulled
☐ Other

_____
_____
_____

DART AEROSPACE LTD	Work Order:	108792
Description: GHW Bracket	Part Number:	D3405-3
Inspection Dwg: D3405 Rev: B		Page 1 of 1

FIRST ARTICLE INSPECTION CHECKLIST

[X] First Article [ ] Prototype

Drawing Dimension	Tolerance	Actual Dimension	Accept	Reject	Method of Inspection	Comments
Ø0.438	+0.006/-0.001	.438	-		V	JKM-05
1.50	+/-0.030	1.50	-		V	
1.750	+/-0.010	1.750	-		V	
R0.63	+/-0.030	.63	-		RG	
3.00	+/-0.030	3.00	-		V	
8.00	+/-0.030	8.00	-		T	JKM-06
6.751	+/-0.005	6.751	-		V	
.125	+/- .010	.118	-		V	

DAS
27
9-89

Measured by:		Audited by:		Prototype Approval:	N/A
Date:	13.11.30	Date:	B 11-02	Date:	N/A

Rev	Date	Change	Revised by	Approved
A	06.09.01	New Issue P/O D3405-043	KJ/JLM	
B	09.05.04	Dimensions update per Dwg Rev. B	KJ/DD	

ITEM No.	QTY. -041	QTY. -043	PART NUMBER	DESCRIPTION
1	X		**D3405-041**	**LUG ASSEMBLY**
2		X	**D3405-043**	**LUG ASSEMBLY**
11	1	1	D3404-1	GHW LUG
12	1		D3405-1	GHW BRACKET
13		1	D3405-3	GHW BRACKET

B

108792 MCJ
13-10-31

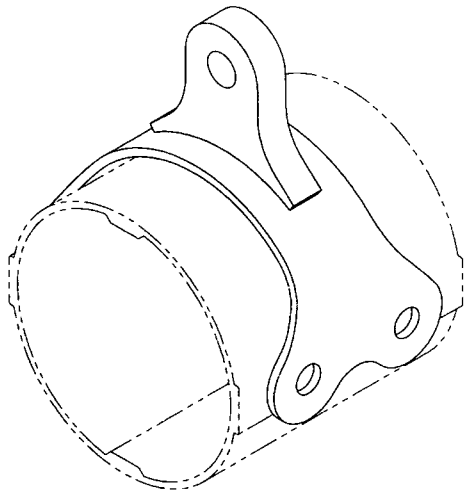

D3405-041 LUG ASSEMBLY
(SKID TUBE SECTION SHOWN
FOR REF ONLY)

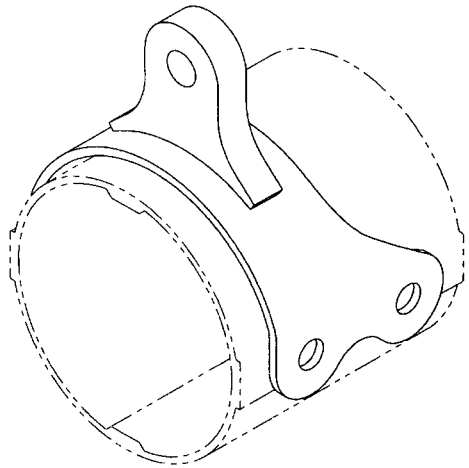

D3405-043 LUG ASSEMBLY
(SKID TUBE SECTION SHOWN
FOR REF ONLY)

RELEASED
08/12/18

NOTES:
1) MATERIAL: N/A
2) FINISH: POWDER COAT ASSEMBLY WHITE (4.3.5.2) PER DART QSI 005 4.3
3) TOLERANCES: PER DART QSI 018 UNLESS OTHERWISE NOTED
4) UNITS: INCHES UNLESS OTHERWISE NOTED
5) BREAK SHARP EDGES: 0.005 TO 0.010 MAX
6) IDENTIFICATION: IDENTIFY WITH DART P/N "D3405-041" USING FINE POINT PERMANENT INK MARKER
: IDENTIFY WITH DART P/N "D3405-043" USING FINE POINT PERMANENT INK MARKER
7) WEIGHT: -041, 0.85 lbs
-043, 0.87 lbs

REV.	DESCRIPTION	BY	DATE
B	DRAWING REDRAWN IN SOLIDWORKS WITH CURRENT STANDARDS AND TRANSFERED TO "B" SIZE BORDER. FLAT PATTERNS FOR -1 & -3 INCREASED IN LENGTH TO PREVENT FOULING AT INSTL (SEE PAR198). SHEETS 3 & 4 ZONE A6 4.120 DIM WAS 4.100.	AJS	08.09.19
A	NEW ISSUE	PH	05.03.08

DESIGN	PH	**DART AEROSPACE LTD** HAWKESBURY, ONTARIO, CANADA	
DRAWN	AJS		
CHECKED		DRAWING NO. D3405	REV. B
MFG. APPR.			SHEET 1 OF 4
APPROVED		TITLE GHW LUG ASSEMBLY	SCALE NTS
DE APPR.			
DATE	08.09.19		

COPYRIGHT © 2005 BY DART AEROSPACE LTD
THIS DOCUMENT IS PRIVATE AND CONFIDENTIAL AND IS SUPPLIED ON THE EXPRESS CONDITION THAT IT IS NOT TO BE USED FOR ANY PURPOSE OR COPIED OR COMMUNICATED TO ANY OTHER PERSON WITHOUT WRITTEN PERMISSION FROM DART AEROSPACE LTD

108792

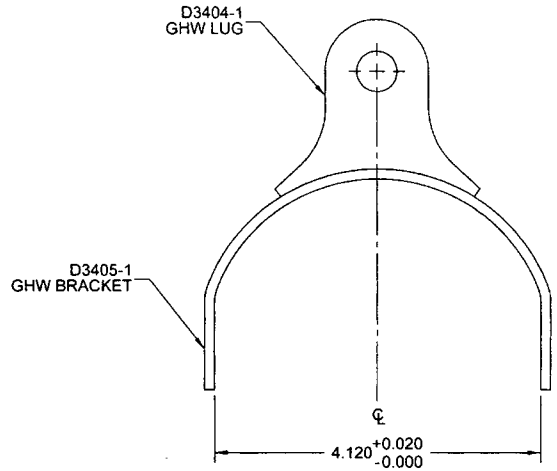

D3405-041 LUG ASSEMBLY

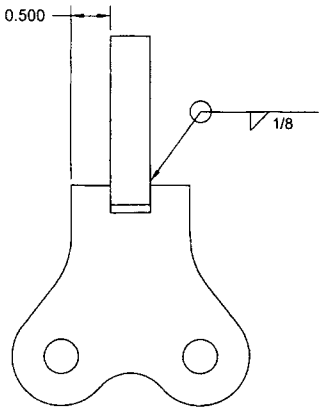

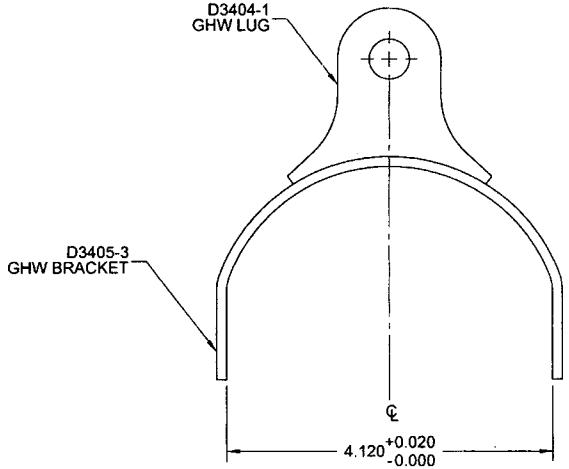

D3405-043 LUG ASSEMBLY

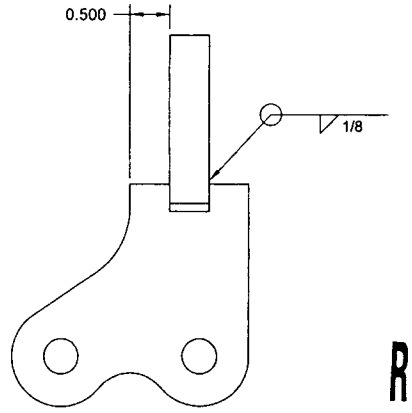

RELEASED
06/12/18

DESIGN	PH	**DART AEROSPACE LTD**	
DRAWN	AJS	HAWKESBURY, ONTARIO, CANADA	
CHECKED		DRAWING NO. D3405	REV. B
MFG. APPR.			SHEET 2 OF 4
APPROVED		TITLE GHW LUG ASSEMBLY	SCALE NTS
DE APPR.			
DATE	08.09.19		

COPYRIGHT © 2005 BY DART AEROSPACE LTD
THIS DOCUMENT IS PRIVATE AND CONFIDENTIAL AND IS SUPPLIED ON THE EXPRESS CONDITION THAT IT IS NOT TO BE USED FOR ANY PURPOSE OR COPIED OR COMMUNICATED TO ANY OTHER PERSON WITHOUT WRITTEN PERMISSION FROM DART AEROSPACE LTD

108792

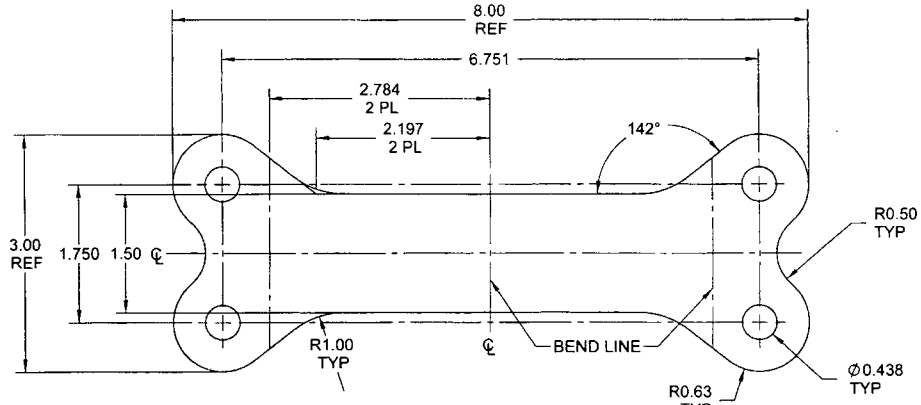

D3405-1F GHW BRACKET FLAT PATTERN

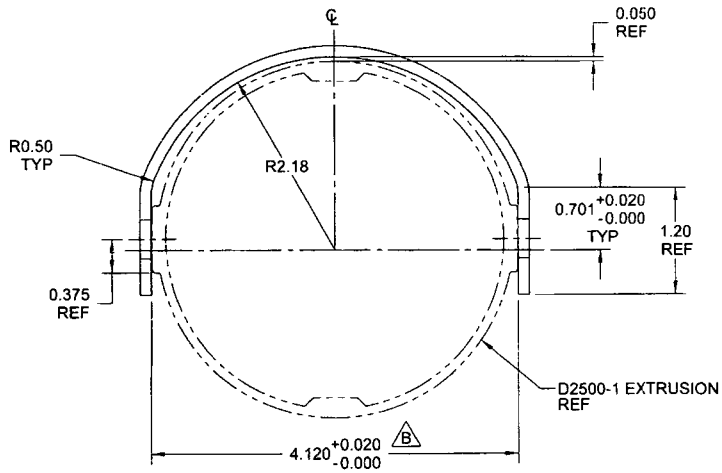

D3405-1 GHW BRACKET
(MAKE FROM D3405-1F)

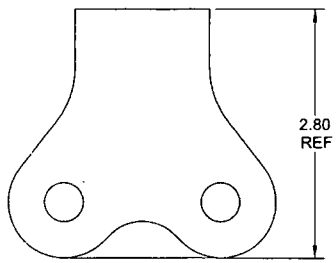

SIDE VIEW FOR REF ONLY

RELEASED
08/12/19

NOTES:
1) MATERIAL: AISI 304/316 STAINLESS STEEL SHEET, 11 GAUGE (0.125 THICK)
PER MIL-S-5059 (ANNEALED) 2B FINISH OR AMS 5513/5524
REF. DART SPEC. M304S11GA
2) FINISH: N/A
3) TOLERANCES: PER DART QSI 018 UNLESS OTHERWISE NOTED
4) UNITS: INCHES UNLESS OTHERWISE NOTED
5) BREAK SHARP EDGES: 0.005 TO 0.010 MAX
6) IDENTIFICATION: N/A
7) WEIGHT: N/A

DESIGN	PH	**DART AEROSPACE LTD** HAWKESBURY, ONTARIO, CANADA
DRAWN	AJS	
CHECKED		DRAWING NO. D3405 REV. B
MFG. APPR.		SHEET 3 OF 4
APPROVED		TITLE GHW LUG ASSEMBLY SCALE NTS
DE APPR.		
DATE	08.09.19	

COPYRIGHT © 2005 BY DART AEROSPACE LTD
THIS DOCUMENT IS PRIVATE AND CONFIDENTIAL AND IS SUPPLIED ON THE EXPRESS CONDITION THAT IT IS NOT TO BE USED FOR ANY PURPOSE OR COPIED OR COMMUNICATED TO ANY OTHER PERSON WITHOUT WRITTEN PERMISSION FROM DART AEROSPACE LTD

108792

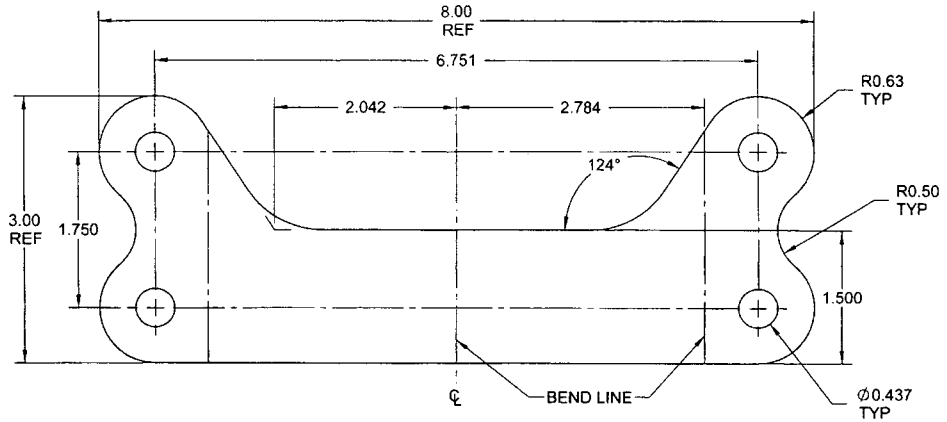

D3405-3F GHW BRACKET FLAT PATTERN

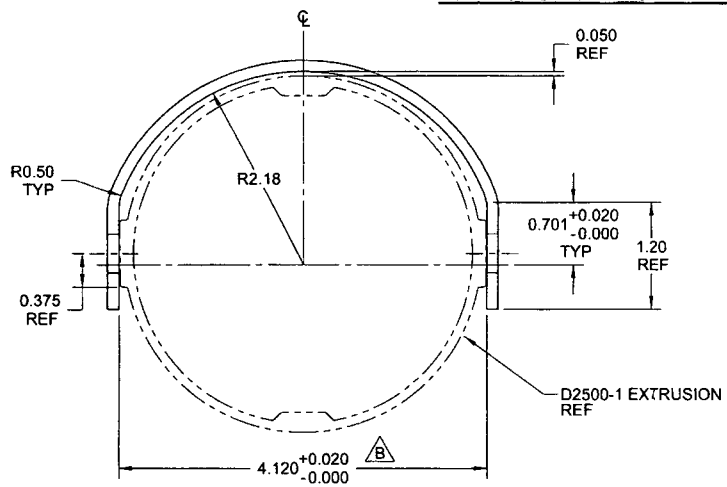

D3405-3 GHW BRACKET
(MAKE FROM D3405-3F)

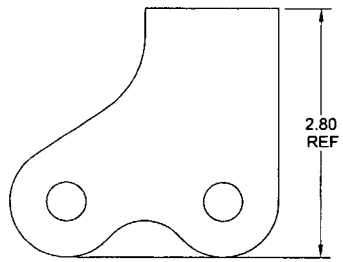

SIDE VIEW FOR REF ONLY

RELEASED
08/12/19 MW

NOTES:
1) MATERIAL: AISI 304/316 STAINLESS STEEL SHEET, 11 GAUGE (0.125 THICK)
PER MIL-S-5059 (ANNEALED) 2B FINISH OR AMS 5513/5524
REF. DART SPEC. M304S11GA
2) FINISH: N/A
3) TOLERANCES: PER DART QSI 018 UNLESS OTHERWISE NOTED
4) UNITS: INCHES UNLESS OTHERWISE NOTED
5) BREAK SHARP EDGES: 0.005 TO 0.010 MAX
6) IDENTIFICATION: N/A
7) WEIGHT: N/A

DESIGN	PH	**DART AEROSPACE LTD**	
DRAWN	AJS	HAWKESBURY, ONTARIO, CANADA	
CHECKED		DRAWING NO. D3405	REV. B
MFG. APPR.			SHEET 4 OF 4
APPROVED		TITLE GHW LUG ASSEMBLY	SCALE NTS
DE APPR.			
DATE	08.09.19		

COPYRIGHT © 2005 BY DART AEROSPACE LTD
THIS DOCUMENT IS PRIVATE AND CONFIDENTIAL AND IS SUPPLIED ON THE EXPRESS CONDITION THAT IT IS NOT TO BE USED FOR ANY PURPOSE OR COPIED OR COMMUNICATED TO ANY OTHER PERSON WITHOUT WRITTEN PERMISSION FROM DART AEROSPACE LTD.